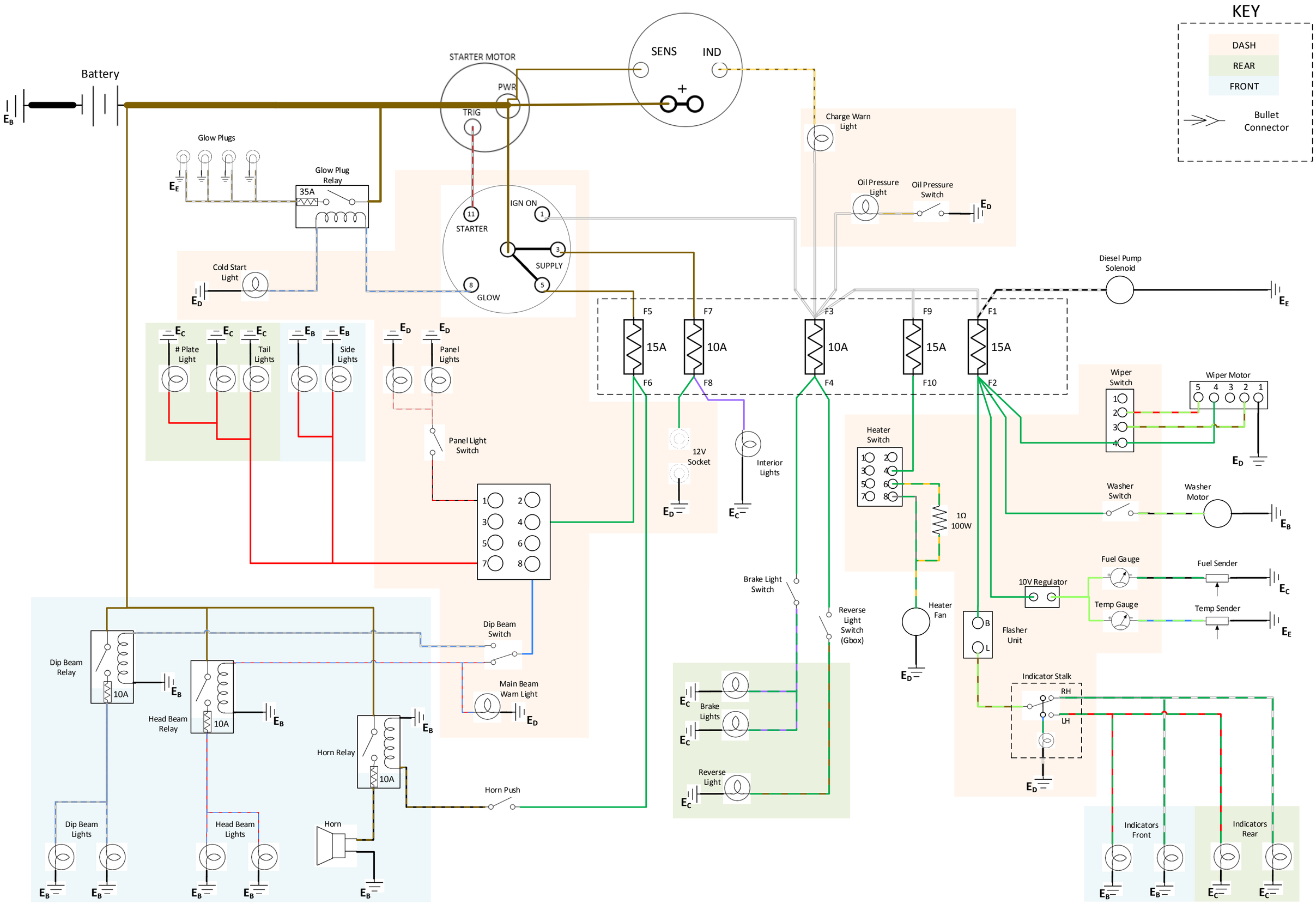
KEY
DASH
REAR
FRONT
Bullet Connector
Battery
E_B
STARTER MOTOR
PWR
TRIG
SENS
IND
+
Charge Warn Light
Glow Plugs
E_E
Glow Plug Relay
35A
IGN ON
STARTER
SUPPLY
GLOW
11
1
3
5
8
Oil Pressure Light
Oil Pressure Switch
E_D
Cold Start Light
Diesel Pump Solenoid
F5
F7
F3
F9
F1
15A
10A
10A
15A
15A
F6
F8
F4
F10
F2
E_C
Plate Light
Tail Lights
E_B
Side Lights
Panel Lights
Panel Light Switch
12V Socket
Interior Lights
Heater Switch
1Ω 100W
Heater Fan
Wiper Switch
Wiper Motor
5 4 3 2 1
Washer Switch
Washer Motor
Fuel Gauge
Fuel Sender
10V Regulator
Temp Gauge
Temp Sender
Flasher Unit
B
L
Indicator Stalk
RH
LH
Dip Beam Switch
Main Beam Warn Light
Dip Beam Relay
Head Beam Relay
Horn Relay
Horn Push
Horn
Dip Beam Lights
Head Beam Lights
Brake Light Switch
Reverse Light Switch (Gbox)
Brake Lights
Reverse Light
Indicators Front
Indicators Rear